BED FRAME

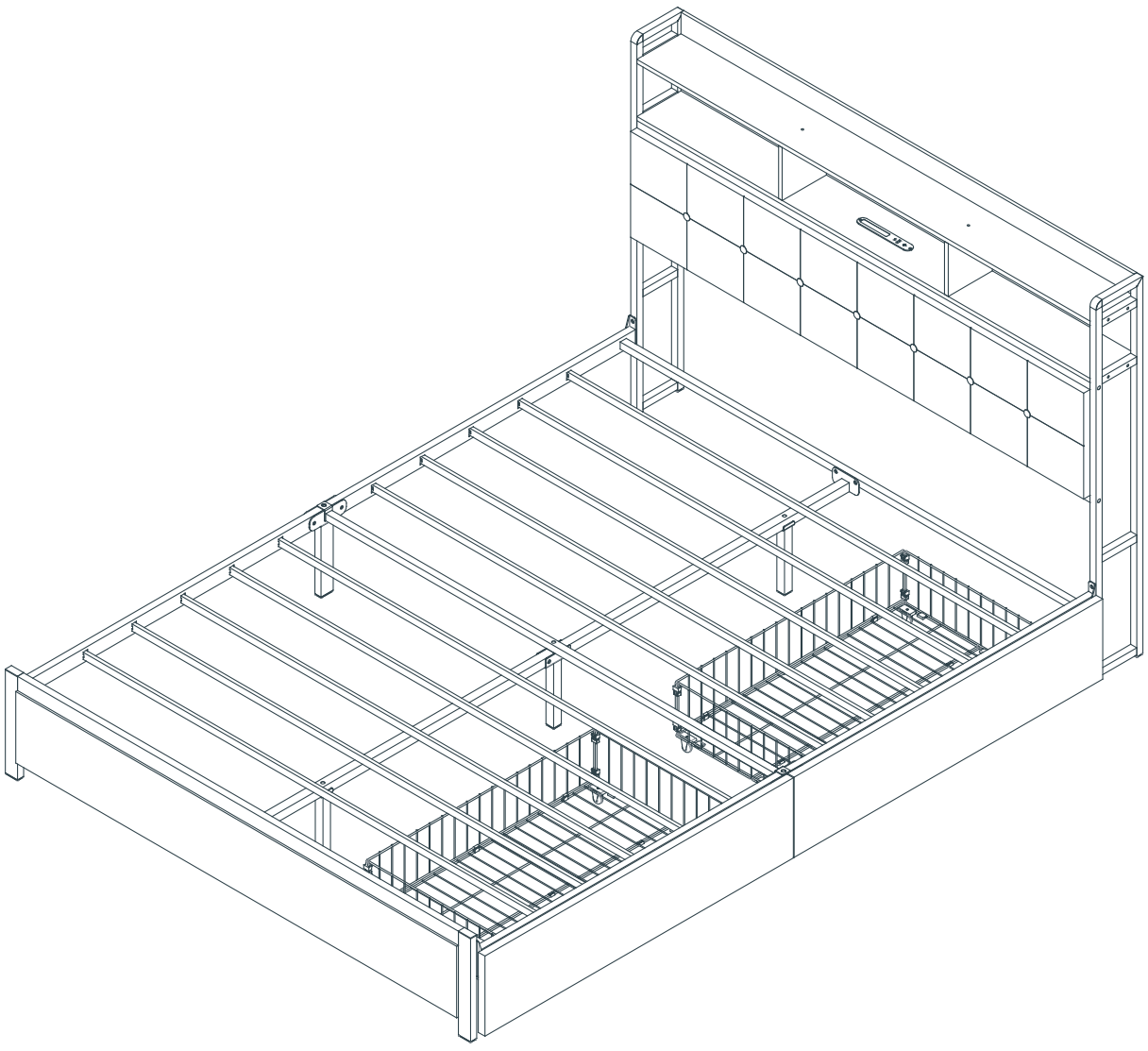

Thank you for choosing our products, please assemble and use it following the instructions.

Assembly Instruction

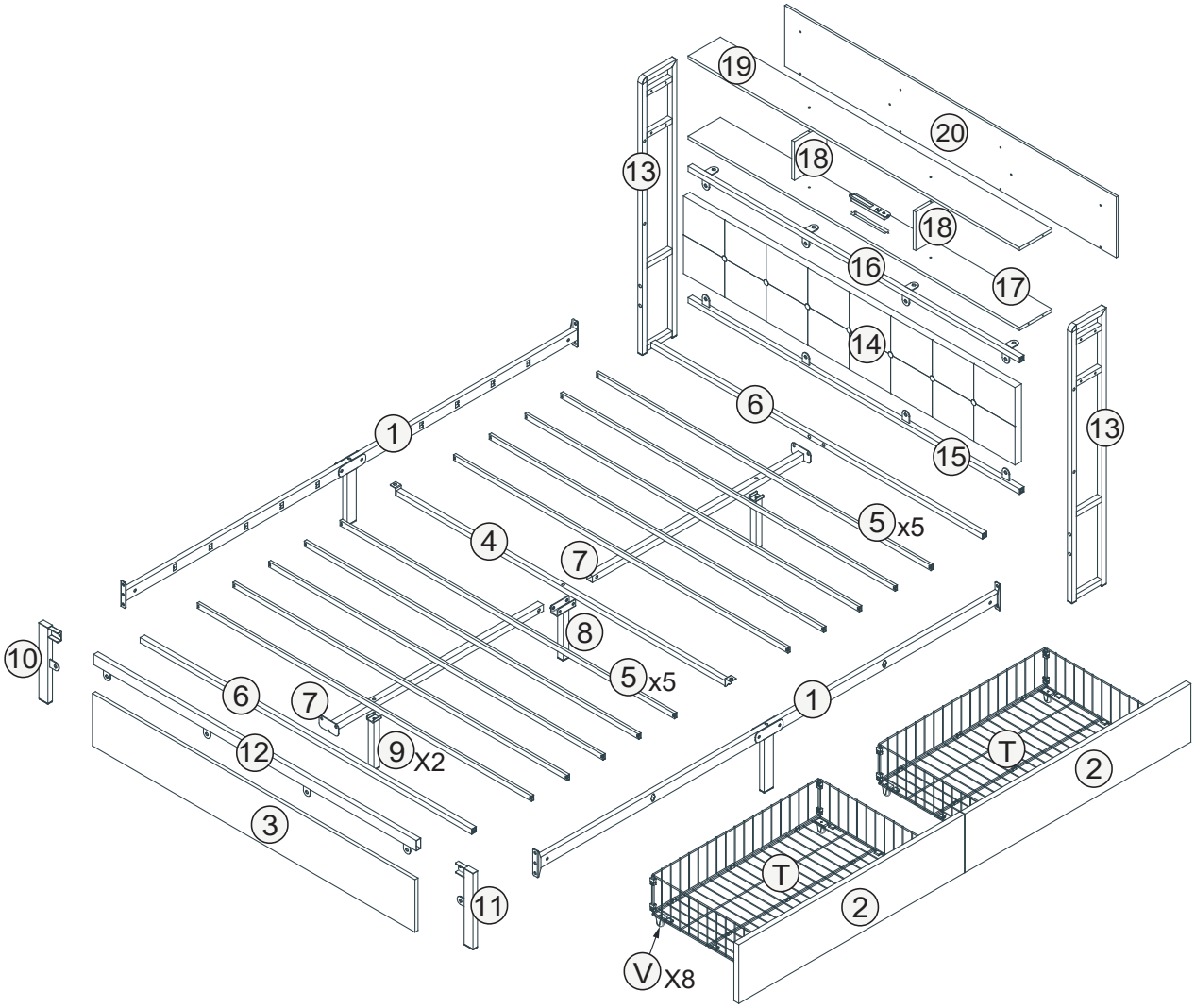

B682-Q/K

Important Note

HARDWARE NOTE :

1.Two or more people are required for assembly

2.Do not screw on the bolts too tight unless the installation is done. Make sure all bolts are tightly screwed before you use it.

Components

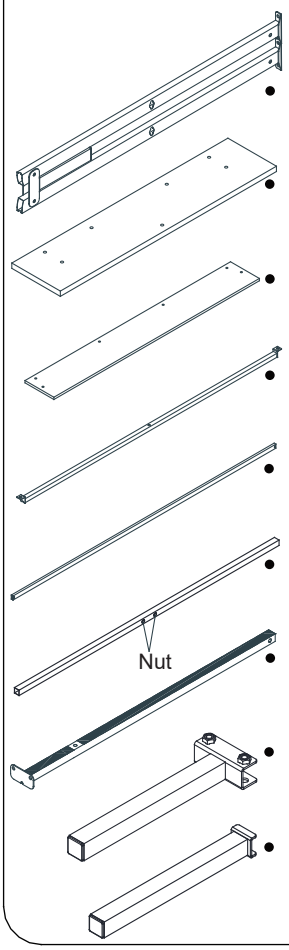

1 x2pcs
2 x2pcs
3 x1pc
4 x1pc
5 x10pcs
6 x2pcs
7 x2pcs
8 x1pc
9 x2pcs

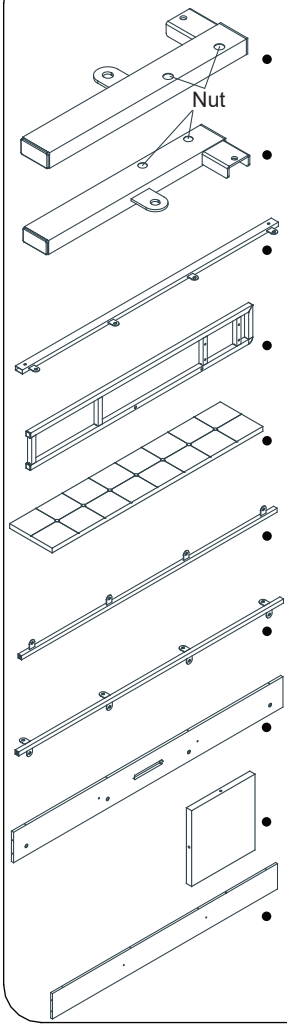

10 x1pc
11 x1pc
12 x1pc
13 x2pcs
14 x1pc
15 x1pc
16 x1pc
17 x1pc
18 x2pcs
19 x1pc

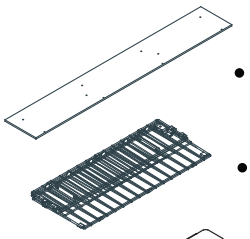

20 x1pc

T x2pcs



V x8pcs



Color zinc
M8x18 A x2pcs



M8x12
white zinc B x4pcs



M8x16 C x40pcs

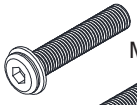

M8x40 D x12pcs

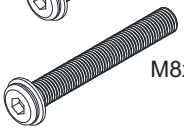

M8x55 E x3pcs



M4x10 F x8pcs

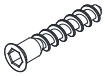

M5x30 G x10pcs

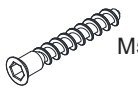

M5x40 H x12pcs



ST4.2x14 I x2pcs



J x4pcs



K x20pcs

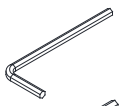

M4 L x1pc

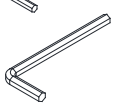

M5 M x1pc

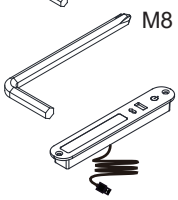

M8 N x1pc
U x1pc

1

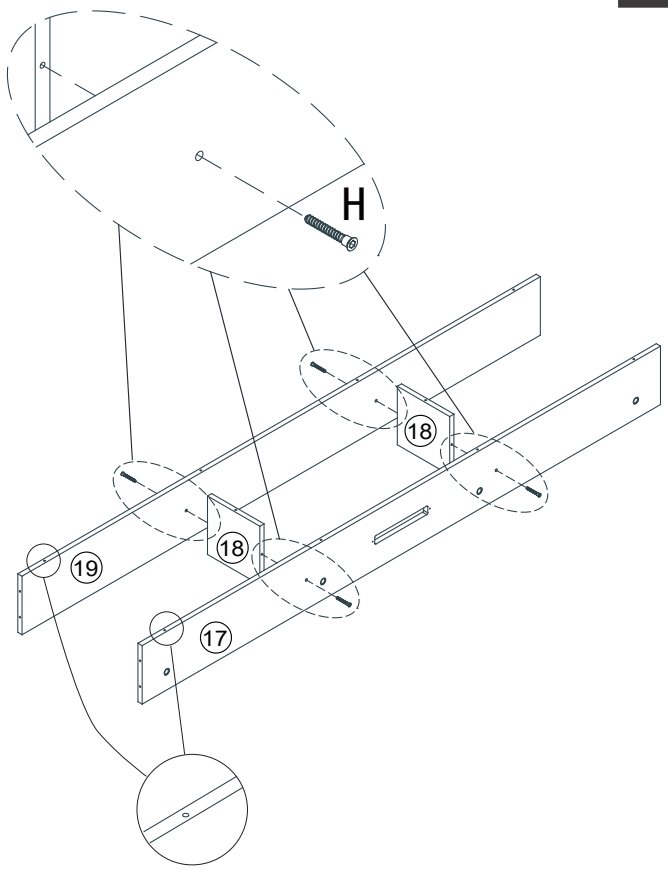

H	M5x40	4pcs

2

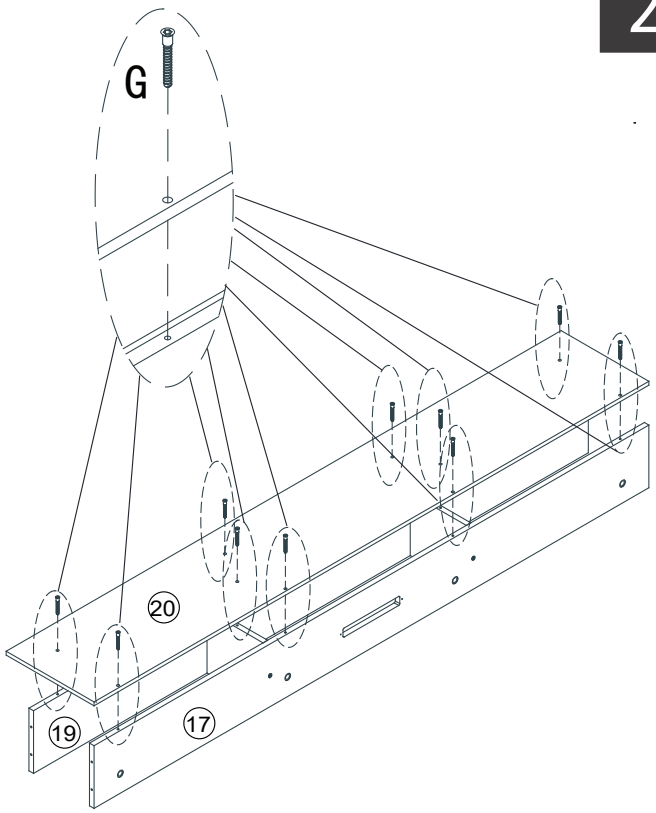

G	M5x30	10pcs

3

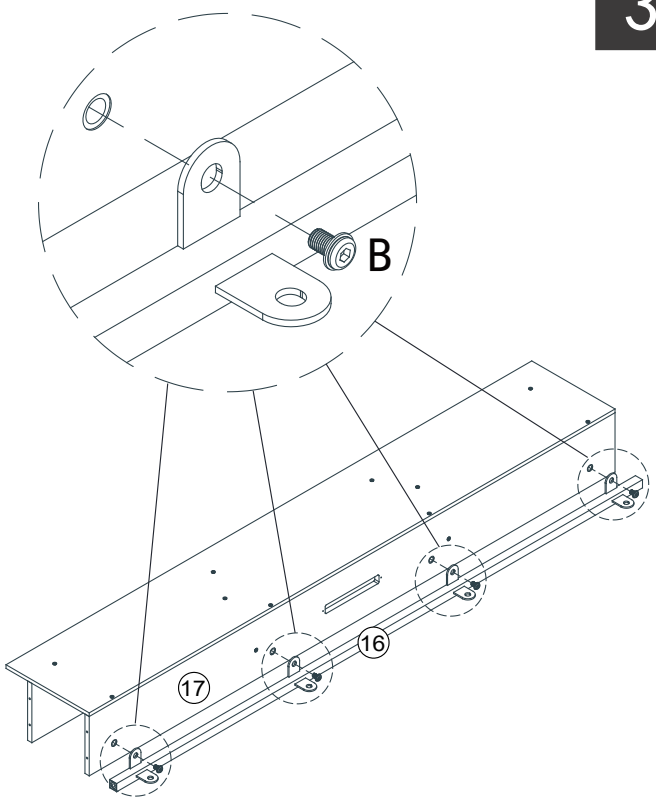

B	M8x12	4pcs	white zinc

4

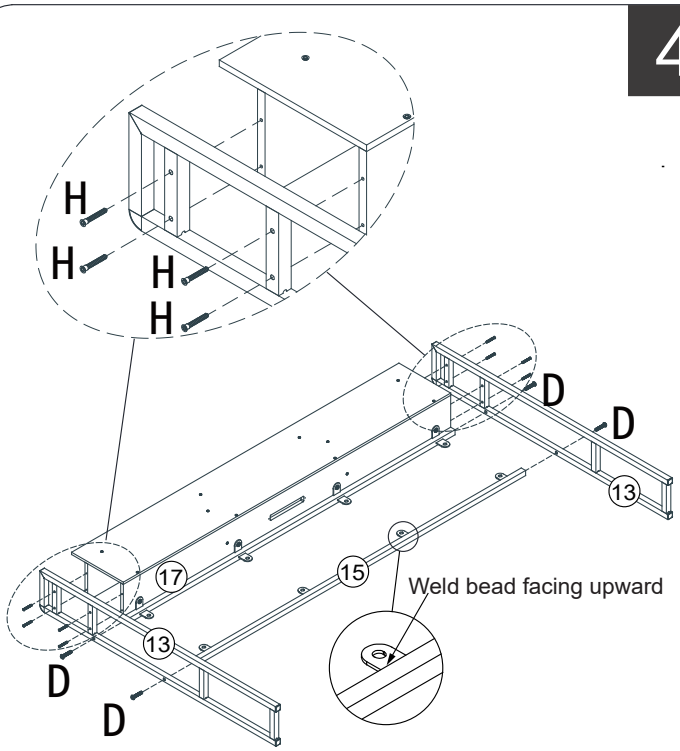

D	M8x40	4pcs
H	M5x40	8pcs

5

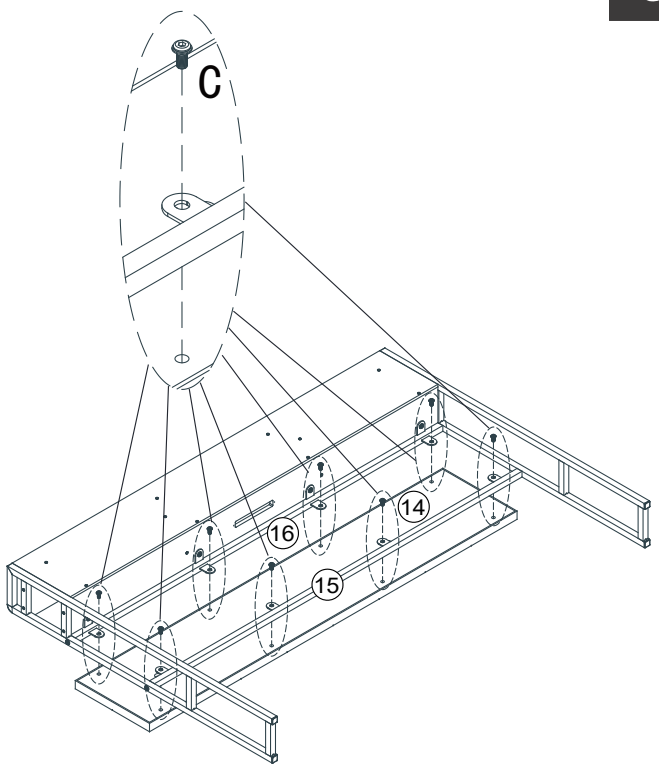

C	M8x16	8pcs

6

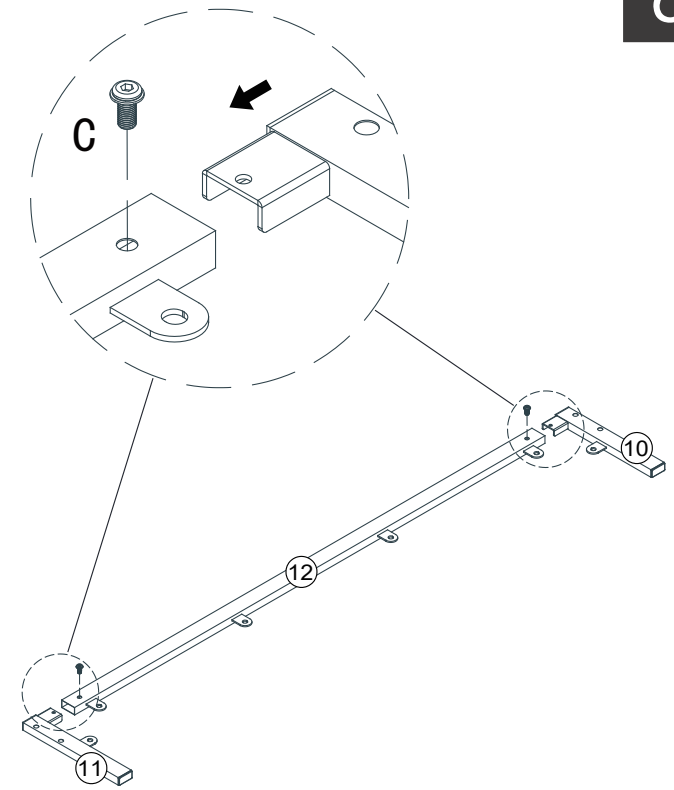

C	M8x16	2pcs

7

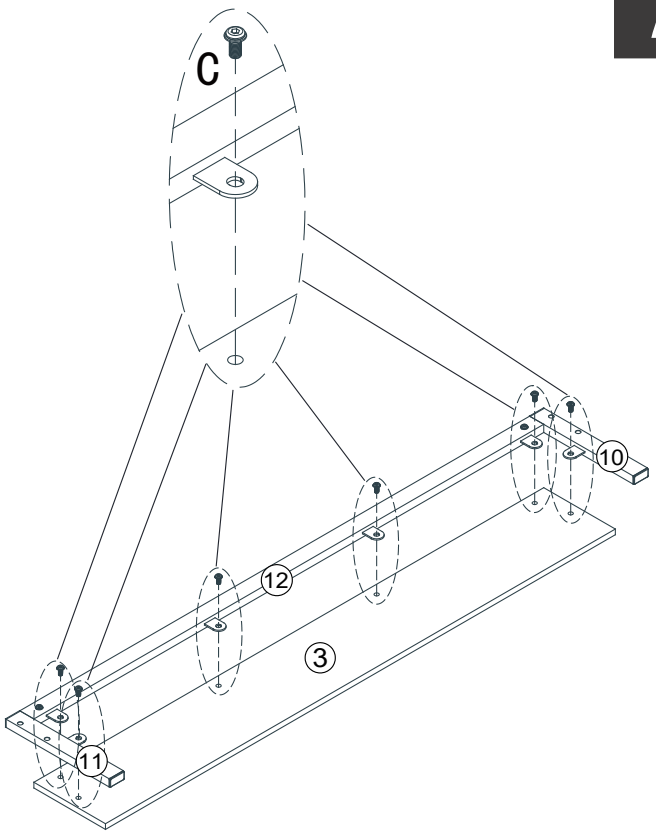

C	M8x16	6pcs

8

X2

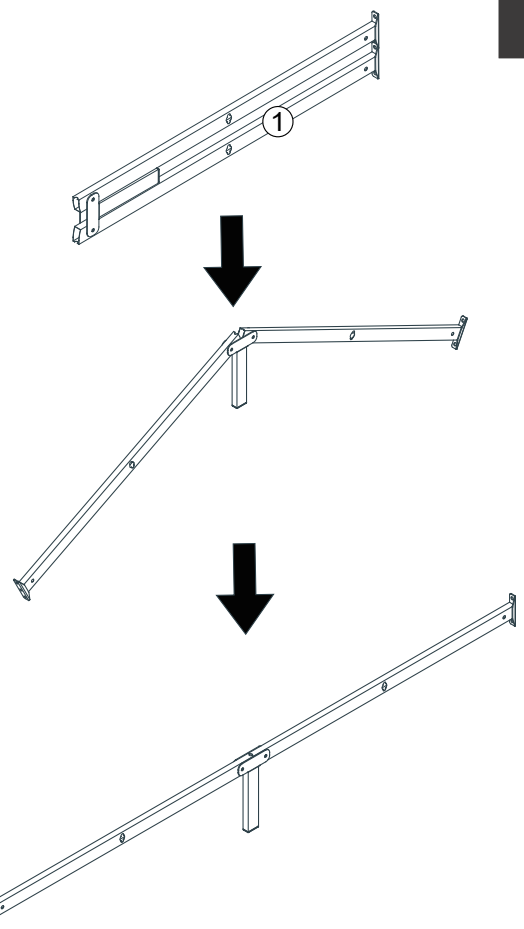

9

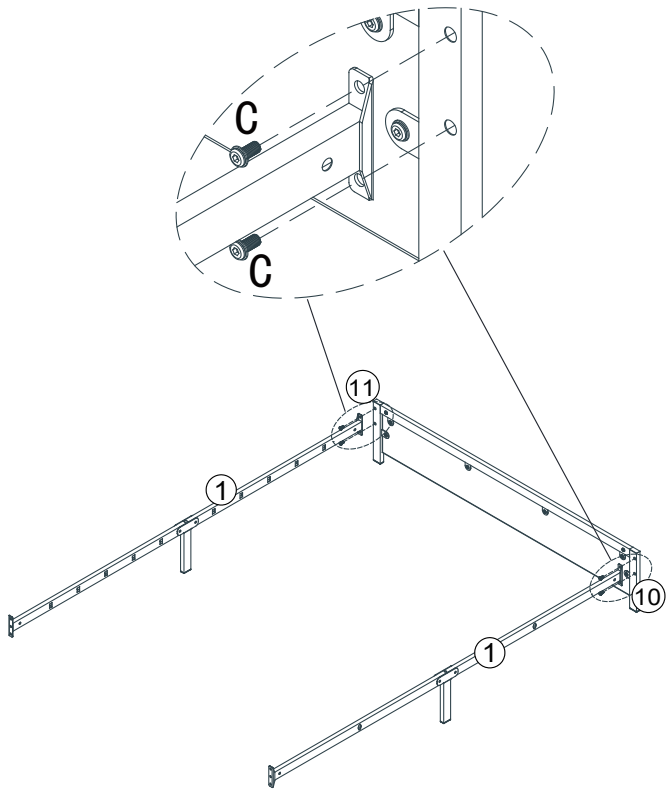

C	M8x16	4pcs

10

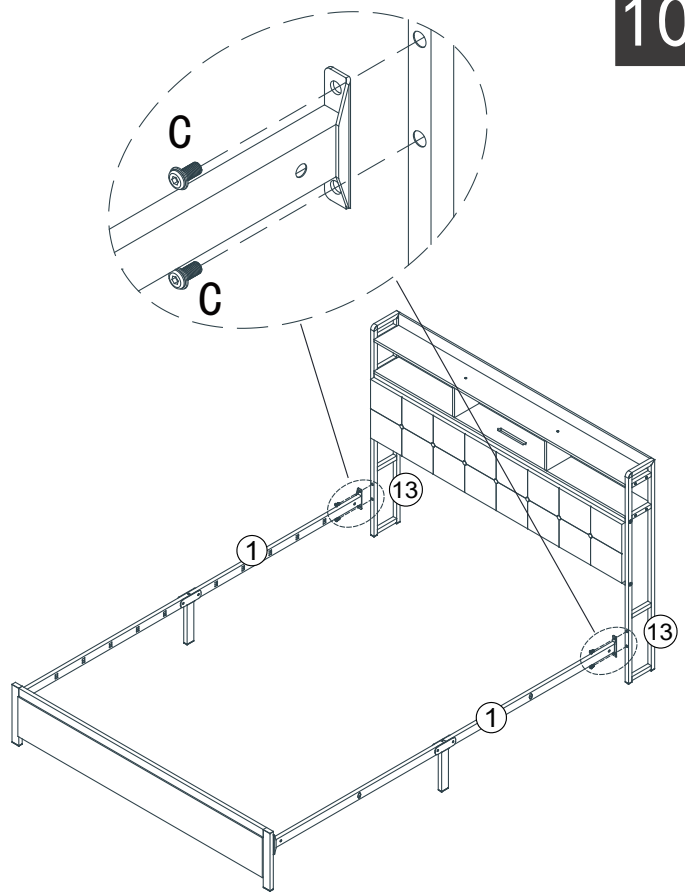

C	M8x16	4pcs

11

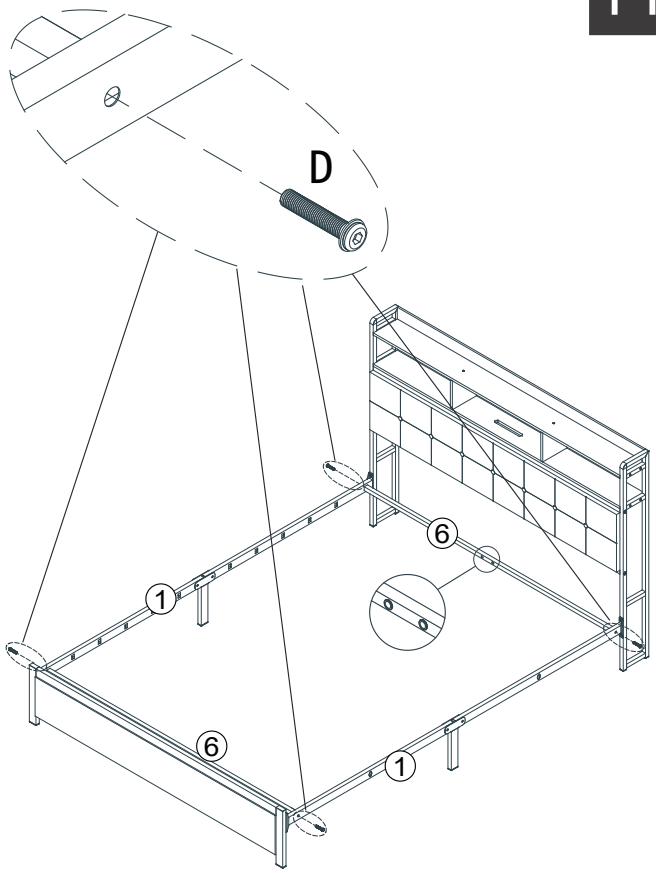

D	M8x40	4pcs

12

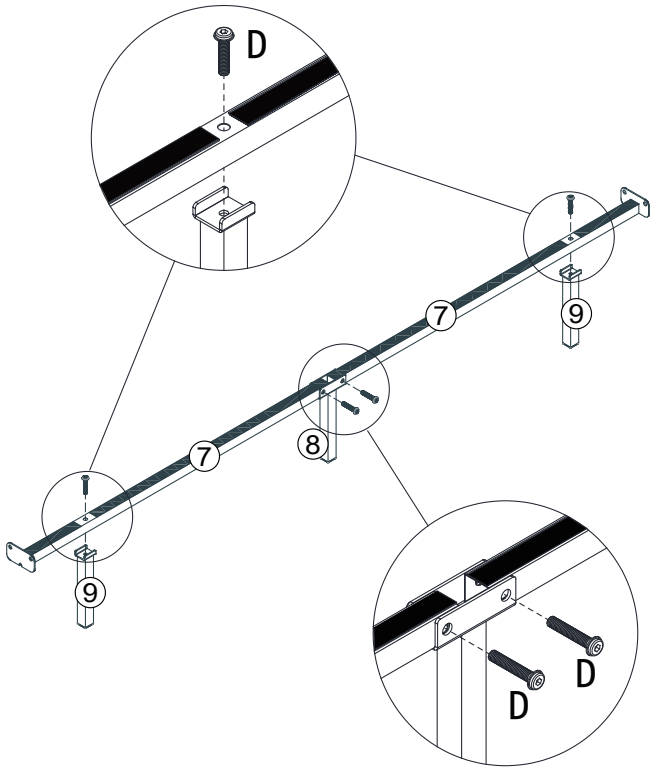

Do not fully tighten the screws yet.

D	M8x40	4pcs

13

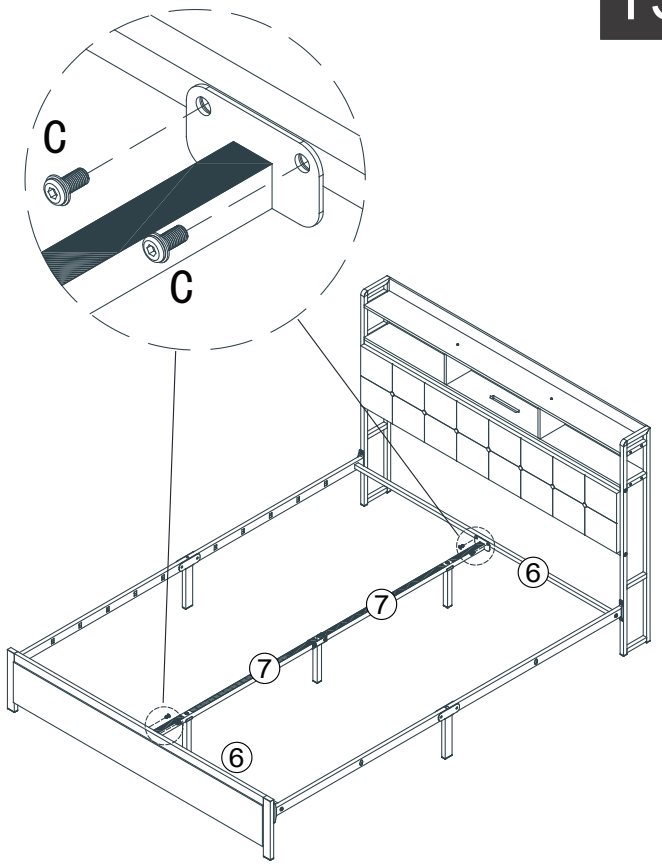

C	M8x16	4pcs

14

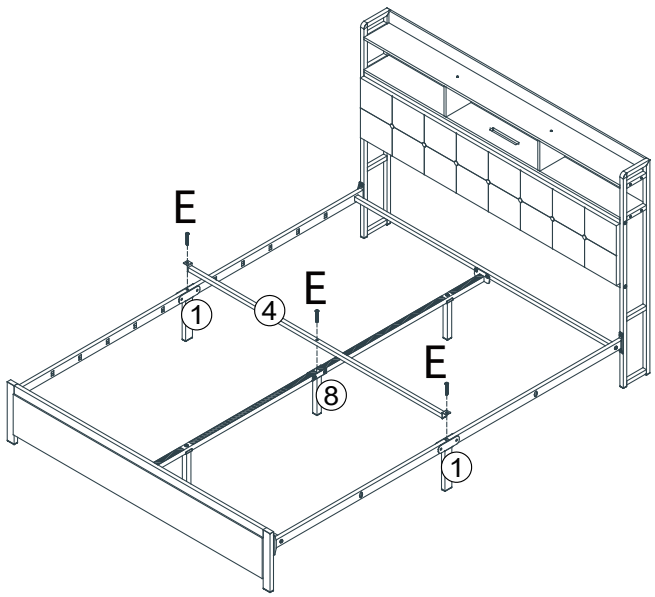

E	M8x55	3pcs

15

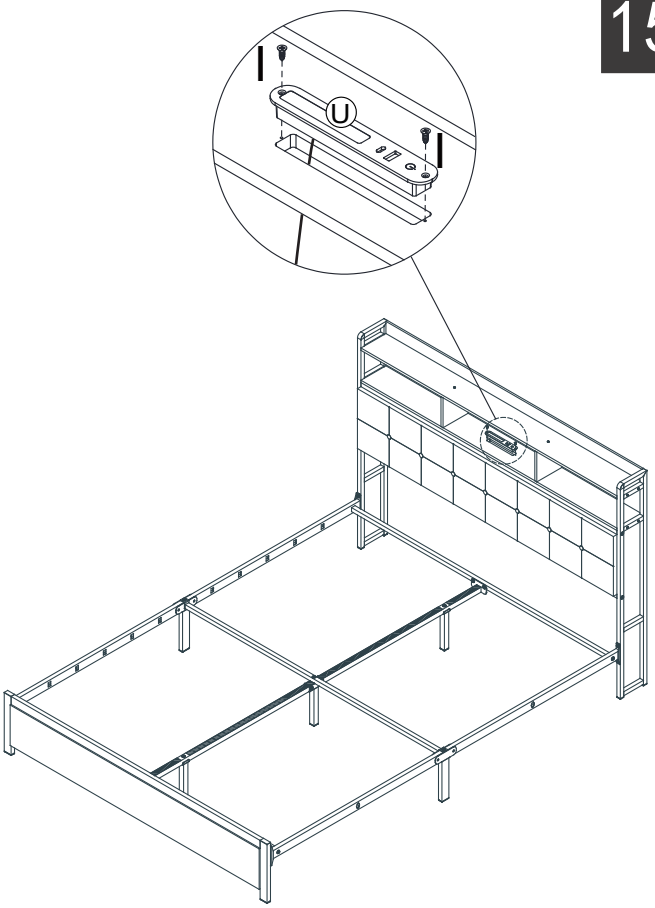

I	ST4x12	2pcs

16

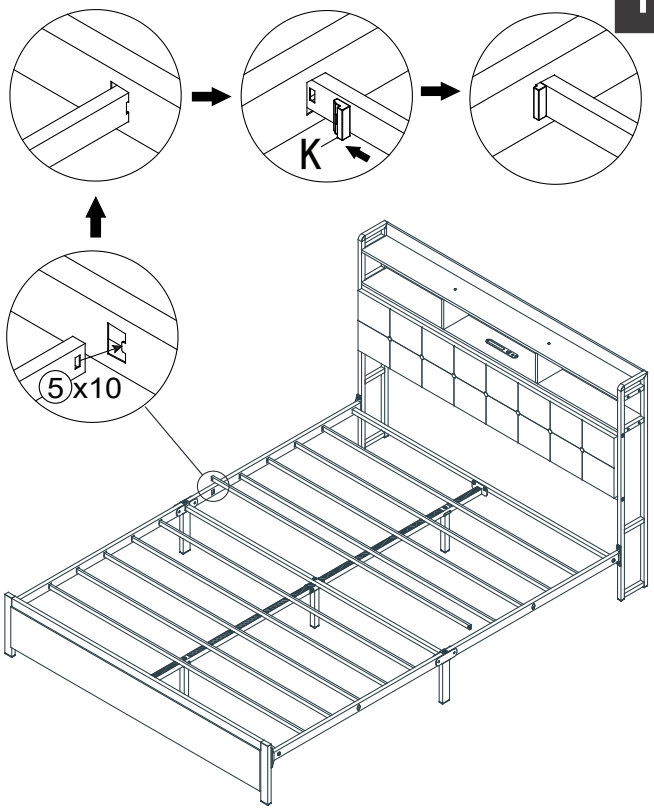

K		20pcs

Note:Now you can tighten all the bolts.

17

x2

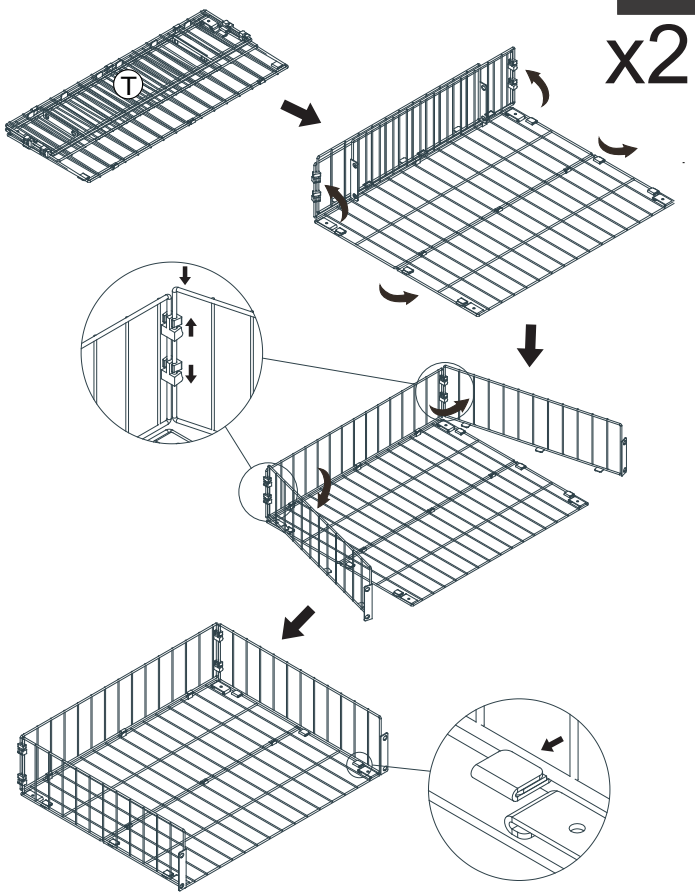

18

x2

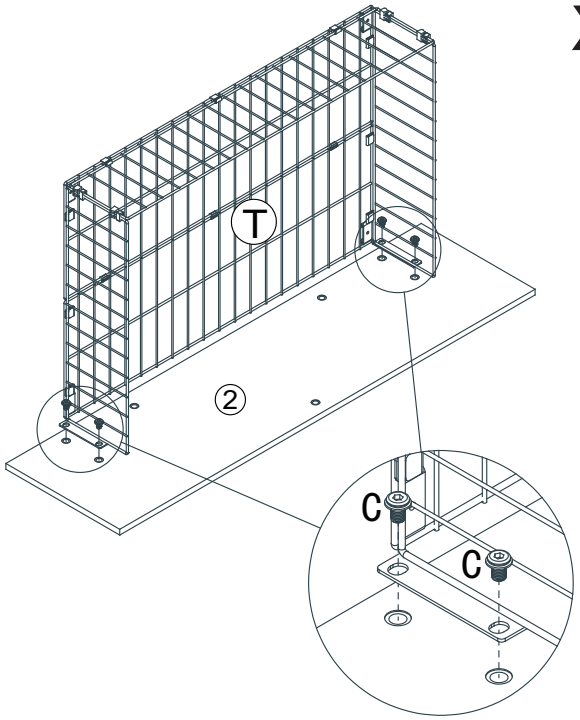

C	M8x16	8pcs

19

x2

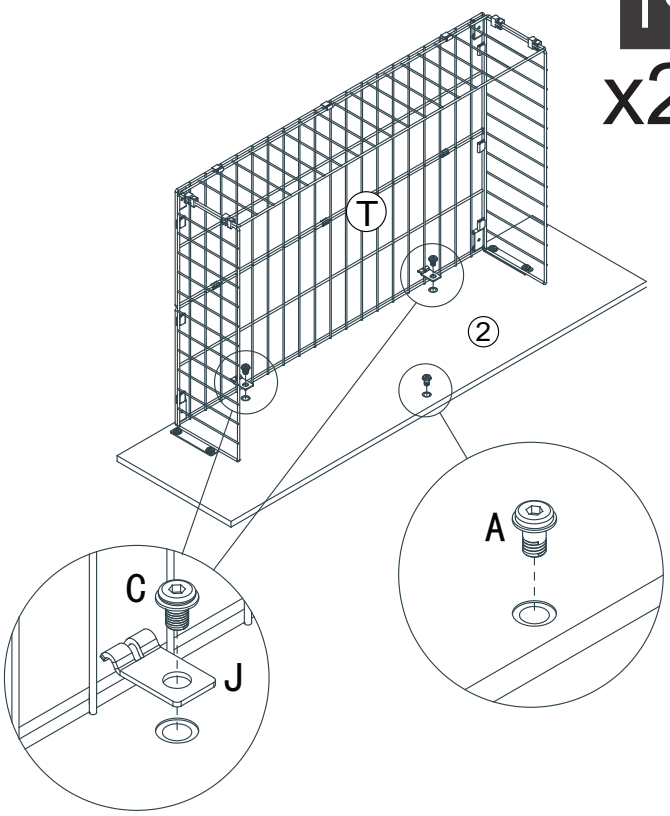

A	M8x18	2pcs
C	M8x16	4pcs
J		4pcs

color zinc

20

x2

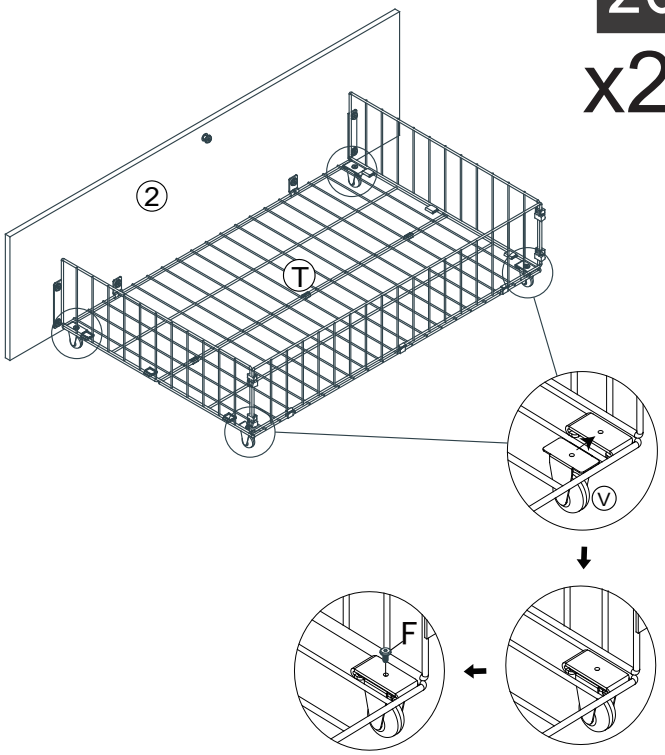

F	M4x10	8pcs

21

TYPE-1

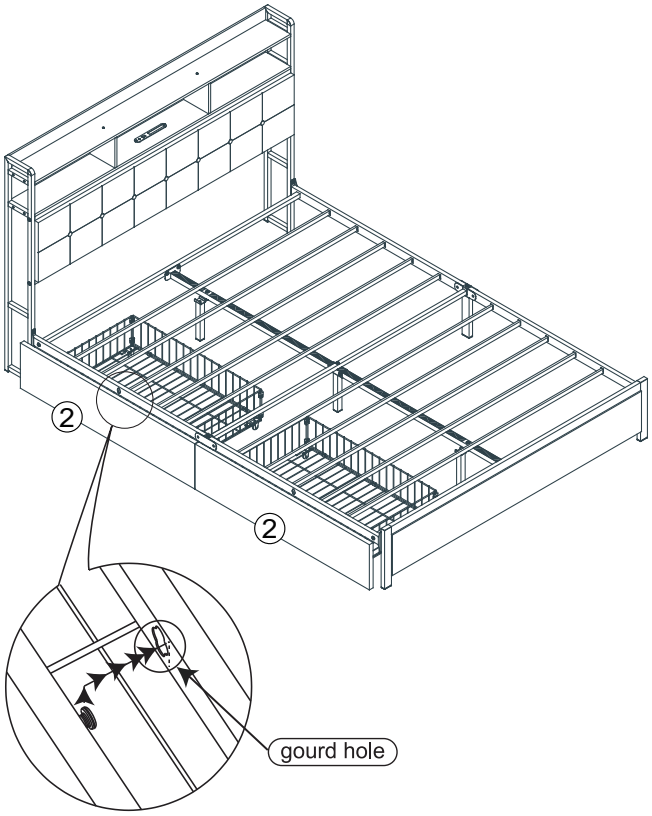

Gently lift the drawer, align the screw with the gourd hole,and then snap it in.

TYPE-2

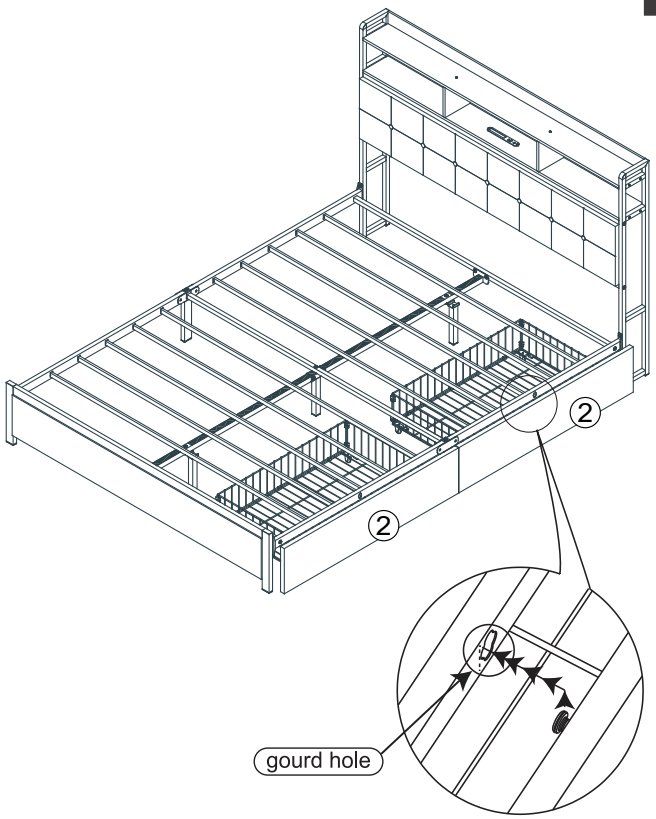

Gently lift the drawer, align the screw with the gourd hole,and then snap it in.

22



Finish